# CHAPTER 10

# MAINTENANCE OF LOADING RACK SUPPORT

## 195. Scope

This chapter contains maintenance information covering components of the loading rack support that is within the scope of direct and general support personnel. The scope of maintenance is determined by the listing of parts in TM 9-1440-250-25P/1/1 and the listing of special tools in SC 4935-92-CL-011.

## 196. References

Organizational maintenance of components of the loading rack support is covered in TM 9-1440-250-20/1. General maintenance procedures are given in chapter 4. This chapter does not make individual references to chapter 4. It is therefore especially important that personnel become familiar with the contents of chapter 4.

## 197. General

The components of the loading rack support (fig. 290) are those parts that support the column of the loading rack support.

*a. Removal.*

(1) Remove the four hexagon nuts and four lockwashers that secure the loading rack truss support to the studs.

***Caution:* The automotive jack used in the following step is only for support of the rack support during maintenance. Do not raise the rack support after installing the jack, as unnecessary strain may damage the adjacent rack side trusses.**

(2) Position the jack under the rack support and raise the jack until it bottoms against the lower member of the rack support.

(3) Remove the headless bent pin.

(4) Slide the column up into the rack support as far as possible and reinstall the bent pin.

(5) Remove the loading rack truss retainer and truss support.

*b. Installation.*

(1) Position and install the loading rack truss support and loading rack truss retainer on the column.

(2) Lower the column and install the loading rack support.

(3) Remove the automotive jack.

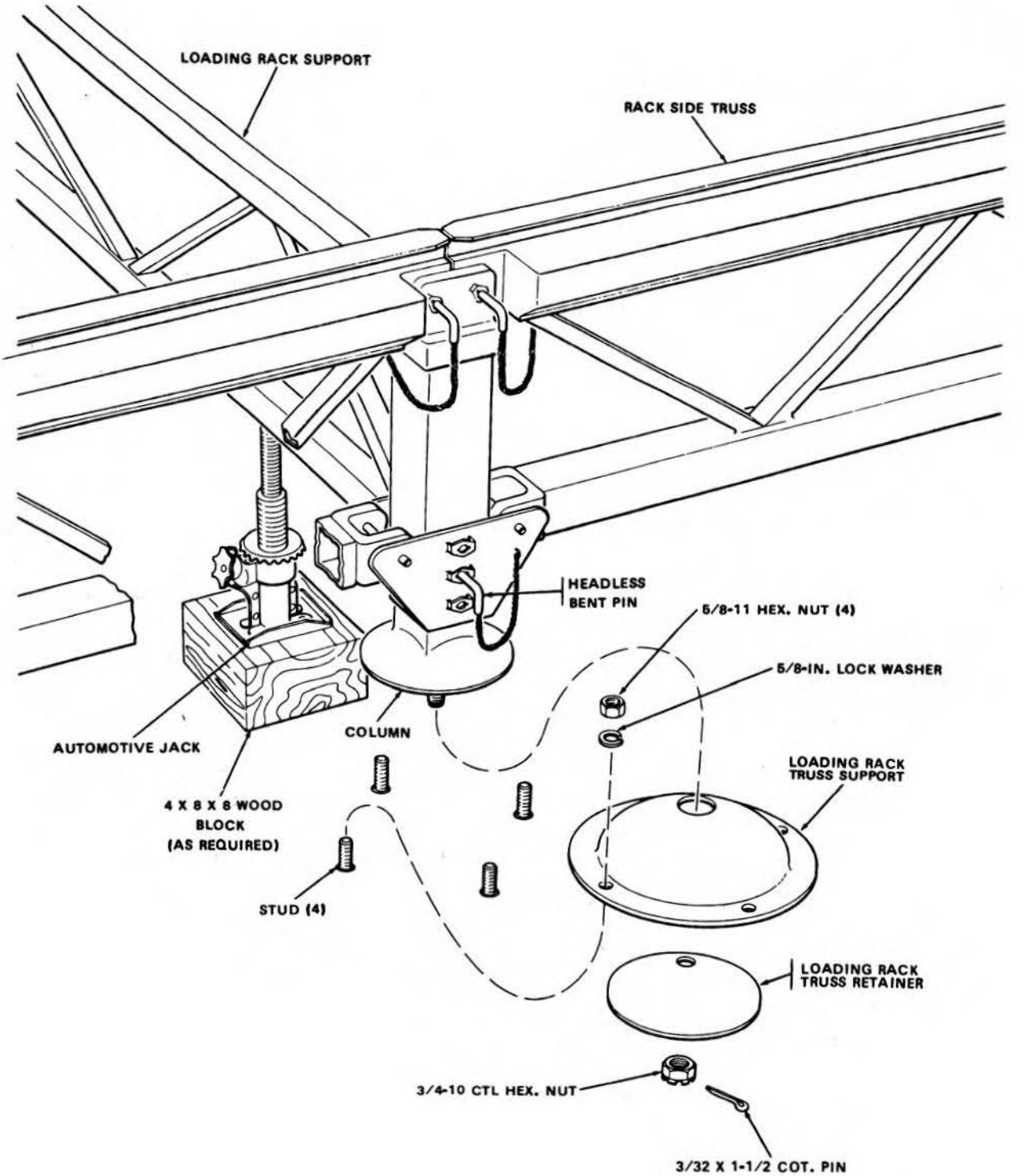


*Figure 290. Loading rack truss support and truss retainer – removal and installation – typical.*